

# iPPC-x701-WES7/iPPC-x801-WES7

10.4"/15" Panel PC with
Atom E3827/E3845 CPU and WES7

## Features

- 10.4" and 15" TFT LCD with Touch Panel
- Windows Embedded Standard 7 SP1
- Intel® Atom™ E3827 1.75 GHz/E3845 1.91 GHz
- Rich software support
- Various Memory and Storage
  - 2 GB DDR3 SDRAM
  - 16 KB EEPROM and 128 KB MRAM for data retention
  - 1 x microSD socket with one microSD card
- Various Communication Interfaces
  - 1 x RJ-45, 10/100/1000BASE-T Ethernet Port
  - 2 x Serial Ports (RS-232/RS-422/RS-485)
  - 2 x USB 2.0 (host)
- 64-bit Hardware Serial Number for Software Protection
- Redundant Power Inputs

## Introduction

The iPPC series is WES7 based Panel PC that combine computing, I/O, and operator interface into a single unit, and provide the perfect solution for integrating HMI, data acquisition and control in an individual iPPC.

It is equipped with an Intel Atom E3827 or E3845 CPU,TFT LCD and a variety of connectives including dual Gigabit Ethernet, USB port, RS-232 and RS-485 interface. The operating system is pre-installed in the built-in mSATA SSD, and the storage can be expanded from a Compact Flash slot. Remote I/O expansion is available to use our Ethernet I/O modules and RS-485 I/O modules. Designed for panel mount installation, the front panel is NEMA 4/IP65 rated and can withstand sprayed water, humidity and extreme dust.

Designed to operate over a wide -20°C ~ 60°C ambient temperature range, the fanless design offers the ultimate in reliability with no moving parts.

Since WES7 has the same Win32 API as Windows 7, most popular applications on desktop can run on WES7 based Panel PC.

## Windows Embedded Standard 7.0

Windows Embedded Standard 7

WES7 has the same Win32 API as Windows 7. Most popular applications on desktop can be run on WES7. It's also compatible with rich Windows IDEs, such as Visual studio, Delphi, Borland C++ Builder, etc.

- Full Win32 API
- Remote Desktop Protocol 5.1
- Silverlight 5
- Enhanced Write Filter
- .NET Framework 3.5 SP1, 4.0, 4.5

## Applications

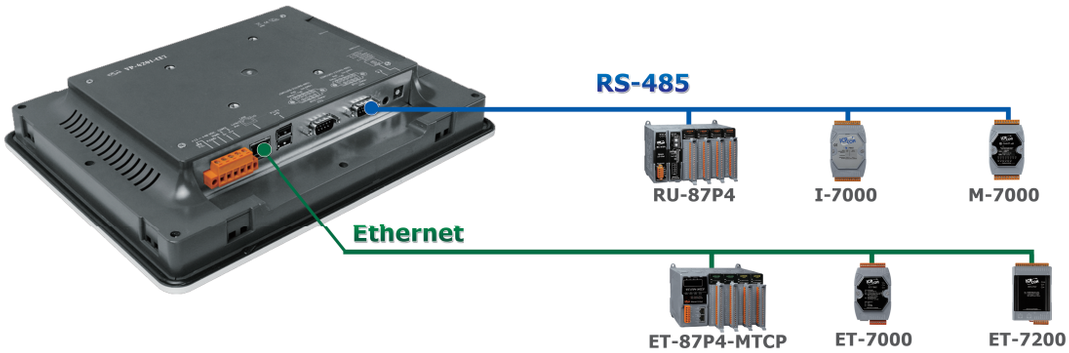


LRI Distribuída no Brasil pela LRI | vendas@lri.com.br | 51 2129-3000

## Specifications

| Models | iPPC-4701-WES7 | iPPC-4801-WES7 | iPPC-6701-WES7 |
|---|---|---|---|
| **Software** | | | |
| OS | Windows Embedded Standard 7 SP1 | | |
| Service | IE11, FTP Server, IIS 7.0, ASP (Java Script, VB Script) | | |
| Framework Support | .Net Framework 3.5, 4.0, 4.5 | | |
| Multilanguage Support | English, German, French, Spanish, Portuguese, Russian, Italian, Korean, Simplified Chinese, Traditional Chinese | | |
| SDK | Dll for VC, Dll for Visual Studio.Net | | |
| **Main Unit** | | | |
| CPU | E3827, 1.75 GHz, 64-bit dual core | | |
| 64-bit Hardware Serial Number | Yes | | |
| System Memory | 2 GB DDR3 SDRAM | 4 GB DDR3 SDRAM | 2 GB DDR3 SDRAM |
| Storage | 32 GB SSD, 16 GB CF card | | |
| Non-Volatile Memory | 128 KB MRAM, 16 KB EEPROM | | |
| Real Time Clock | Provide seconds, minutes, hours, dates, day of week, month, year | | |
| Watchdog Timer | Dual Watchdog Timer | | |
| **Display** | | | |
| Size | 10.4" (4:3) | | 15" (4:3) |
| Resolution | 800 x 600 | | 1024 x 768 |
| Brightness | 400 cd/m2 | | |
| Contrast Ratio | 500:1 | | 700:1 |
| Backlight Life | 50,000 hours | | |
| Touch Panel | 5-wire, resistive type; light transmission: 80 % | | |
| **LED Indicators** | | | |
| Status | 1 x System, 1 x Power | | 1 x System, 1 x Power, 2 x Programmable |
| **COM Ports** | | | |
| Ports | 2 x RS-232/RS-422/RS-485 | | |
| **HMI** | | | |
| Buzzer | Yes | | |
| Rotary Switch | 1 x 10 Position (0 ~ 9) | | |
| **Audio** | | | |
| Cable | Earphone-out | | Microphone-in and Earphone-out |
| **Ethernet** | | | |
| Ports | 1 x RJ-45 10/100/1000 Base-TX | | 2 x RJ-45 10/100/1000 Base-TX |
| **USB** | | | |
| USB 2.0 | 2 | | |
| **Power** | | | |
| Input Range | +10 ~ 30 VDC (1500 VDC Isolated) | | |
| Redundant Power Inputs | Yes | | |
| Consumption | 22.0 W | | 29.0 W |
| **Mechanical** | | | |
| Casing | Metal | | |
| Dimensions (W x L x H) | 291 x 229 x 53 mm | | 381 x 305 x 63 mm |
| Panel Cut-Out (W x H) | 274 x 211, ±1 mm | | 364 x 288, ±1 mm |
| Installation | Panel Mounting, VESA Mounting (75 x 75, 100 x 100) | | |
| Ingress Protection Rating | Front panel: NEMA 4/IP65 | | |
| **Environmental** | | | |
| Operating Temperature | -20 °C ~ +60 °C | | |
| Storage Temperature | -20 °C ~ +70 °C | | |
| Humidity | 10 ~ 90 % RH, Non-condensing | | |

LRI Distribuída no Brasil pela LRI | vendas@lri.com.br | 51 2129-3000

## Appearance

### iPPC-4701-WES7 / iPPC-4801-WES7

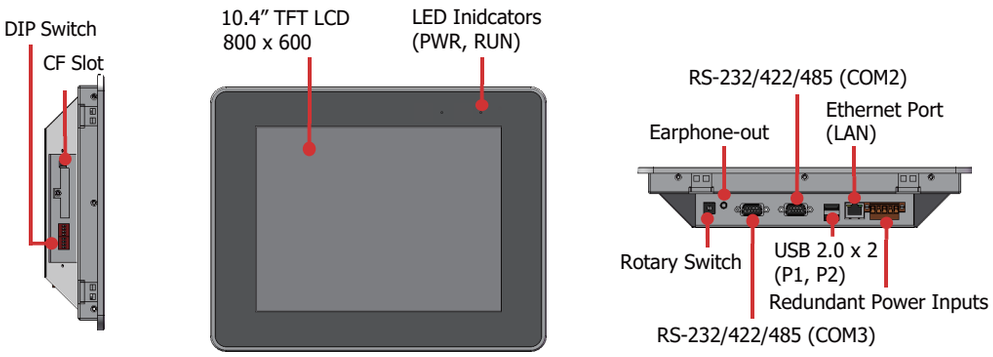


### iPPC-6701-WES7

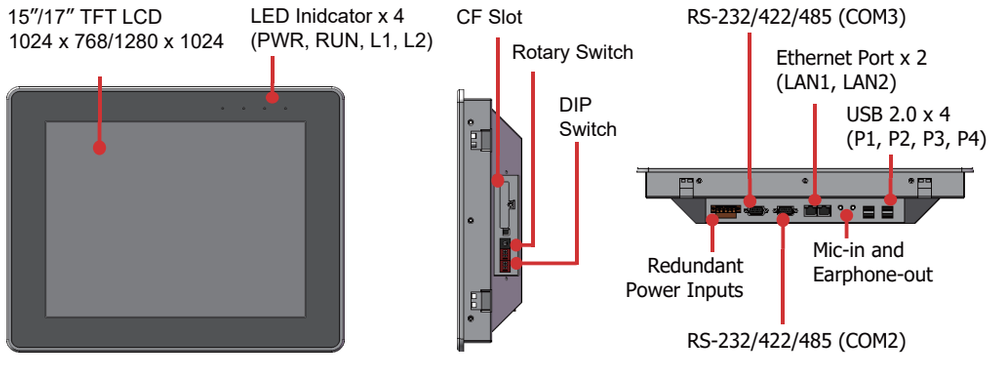


## Dimensions (Units: mm)

### iPPC-4701-WES7 / iPPC-4801-WES7

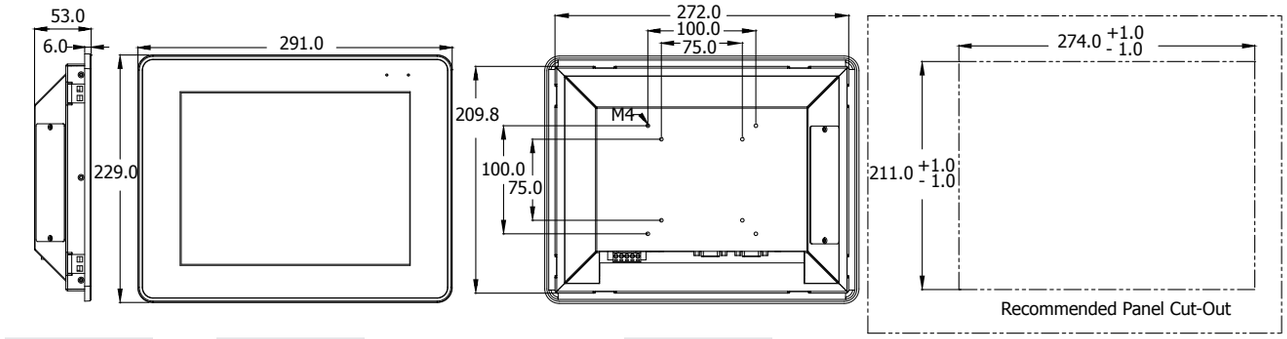


Left Side View | Front Veiw | Rear View

### iPPC-6701-WES7

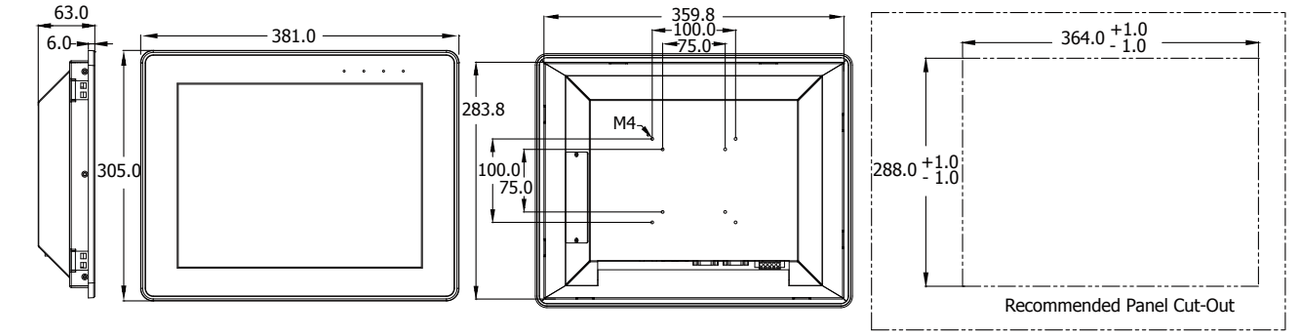


Left Side View | Front Veiw | Rear View

LRI Distribuída no Brasil pela LRI | vendas@lri.com.br | 51 2129-3000

## Ordering Information

| | |
|---|---|
| **iPPC-4701-WES7 CR** | 10.4" Panel PC with Atom E3827 CPU and WES7 (RoHS) |
| **iPPC-6701-WES7 CR** | 15" Panel PC with Atom E3827 CPU and WES7 (RoHS) |
| **iPPC-4801-WES7 CR** | 10.4" Panel PC with Atom E3845 CPU and WES7 (RoHS) |

LRI Distribuída no Brasil pela LRI | vendas@lri.com.br | 51 2129-3000



# iPPC-6731-WES7/iPPC-6831-WES7

15" Panel PC with Atom E3827/E3845 CPU, WES7, and 3 I/O Slots

## Features

- 15" LCD with Touch Panel
- Windows Embedded Standard 7 SP1
- Intel® Atom™ E3827 1.75 GHz/E3845 1.91 GHz
- Rich software support
- Various Memory and Storage
  - 2/4 GB DDR3 SDRAM
  - 16 KB EEPROM and 128 KB MRAM for data retention
- Various Communication Interfaces
  - 2 x RJ-45, 10/100/1000BASE-TX Ethernet Port
  - 3 x Serial Ports (RS-232/RS-485)
  - 3 x USB 2.0 (host)
- NEMA 4/IP65 Compliant Front Panel

## Introduction

The iPPC-6731-WES7/iPPC-6831-WES7 series product is WES7 based Panel PC that combine computing, I/O, and operator interface into a single unit, and provides a perfect solution for integrating HMI, data acquisition and control in an individual PAC. It is equipped with an Intel Atom E3827/E3845 CPU, three I/O expansion slots, TFT LCD and a variety of connectives including dual Gigabit Ethernet, USB port, RS-232 and RS-485 interface. The operating system is pre-installed in the built-in mSATA SSD, and the storage can be expanded via a Compact Flash slot. The local I/O slots are available for using our I-8K or I-87K series I/O modules and remote I/O expansion is available for connecting to our Ethernet I/O modules or RS-485 I/O modules.

The iPPC-6731-WES7/iPPC-6831-WES7 is designed for panel mount installation, the front panel is NEMA 4/IP65 rated and can withstand sprayed water, humidity and extreme dust. It is also designed to operate over a wide -20°C to 60°C ambient temperature range, the fanless design offers the ultimate in reliability with no moving parts.

Since WES7 has the same Win32 API as Windows 7, most popular applications on desktop can run on WES7 based Panel PC.

## Windows Embedded Standard 7.0

Windows Embedded Standard 7

WES7 has the same Win32 API as Windows 7. Most popular applications on desktop can be run on WES7. It's also compatible with rich Windows IDEs, such as Visual studio, Delphi, Borland C++ Builder, etc.

- Full Win32 API
- Remote Desktop Protocol 5.1
- Silverlight 5
- Enhanced Write Filter
- .NET Framework 3.5 SP1, 4.0, 4.5

## Applications

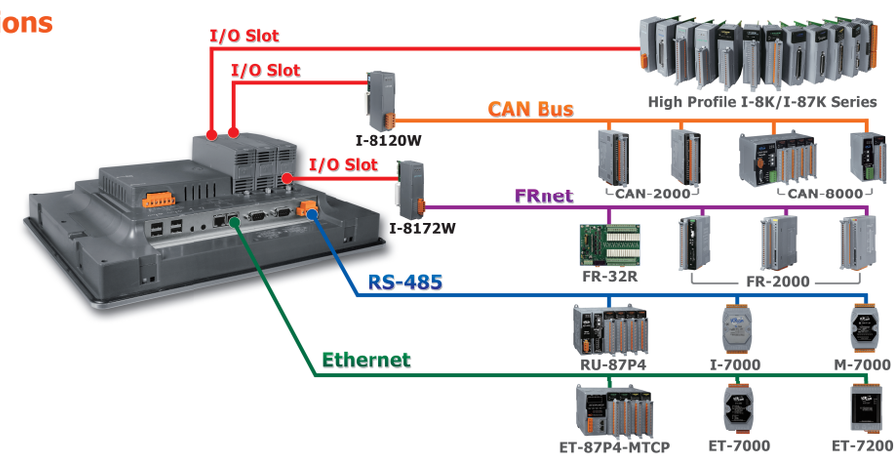


LRI Distribuída no Brasil pela LRI | vendas@lri.com.br | 51 2129-3000

## Specifications

| Models | iPPC-6731-WES7 | iPPC-6831-WES7 |
|---|---|---|
| **Software** | | |
| OS | Windows Embedded Standard 7 SP1 | |
| Service | IE11, FTP Server, IIS 7.0, ASP (Java Script, VB Script) | |
| Framework Support | .Net Framework 3.5, 4.0, 4.5 | |
| Multilanguage Support | English, German, French, Spanish, Portuguese, Russian, Italian, Korean, Simplified Chinese, Traditional Chinese | |
| SDK | Dll for VC, Dll for Visual Studio.Net | |
| **Main Unit** | | |
| CPU | E3827, 1.75 GHz, 64-bit dual core | E3845, 1.91 GHz, 64-bit quad core |
| 64-bit Hardware Serial Number | Yes | |
| System Memory | 2 GB DDR3 SDRAM | 4 GB DDR3 SDRAM |
| Storage | 32 GB SSD, 16 GB CF card | |
| Non-Volatile Memory | 128 KB MRAM, 16 KB EEPROM | |
| Real Time Clock | Provide seconds, minutes, hours, dates, day of week, month, year | |
| Watchdog Timer | Dual Watchdog Timer | |
| **Display** | | |
| Size | 15" (4:3) | |
| Resolution | 1024 x 768 | |
| Brightness | 400 cd/m2 | |
| Contrast Ratio | 700:1 | |
| Backlight Life | 50,000 hours | |
| Touch Panel | 5-wire, resistive type; light transmission: 80 % | |
| **LED Indicators** | | |
| Status | 1 x System, 1 x Power, 2 x Programmable | |
| **I/O Expansion** | | |
| I/O Type | I-8K, I-87K series | |
| Slots | 3 | |
| **COM Ports** | | |
| Ports | 1 x RS-232, 1 x RS-485 (2500 VDC), 1 x RS-232/RS-485 (2500 VDC) | |
| **HMI** | | |
| Buzzer | Yes | |
| Rotary Switch | 1 x 10 Position (0 ~ 9) | |
| **Audio** | | |
| Cable | Microphone-in and Earphone-out | |
| **Ethernet** | | |
| Ports | 2 x RJ-45, 10/100/1000 Base-TX | |
| **USB** | | |
| USB 2.0 | 3 | |
| **Power** | | |
| Input Range | +10 ~ 30 VDC (1 kV Isolated ) | |
| Redundant Power Inputs | Yes | |
| Consumption | 25.0 W | |
| **Mechanical** | | |
| Casing | Plastic | |
| Dimensions (W x L x H) | 381 x 305 x 88 (mm) | |
| Panel Cut-Out (W x H) | 366 x 290, ±1 (mm) | |
| Installation | Panel Mounting | |
| Ingress Protection Rating | Front panel: NEMA 4/IP65 | |
| Weight | 5 kg | 5.1 kg |
| **Environmental** | | |
| Operating Temperature | -20 °C ~ +60 °C | |
| Storage Temperature | -20 °C ~ +70 °C | |
| Humidity | 10 ~ 90 % RH, Non-condensing | |



Distribuída no Brasil pela LRI | vendas@lri.com.br | 51 2129-3000

## Appearance

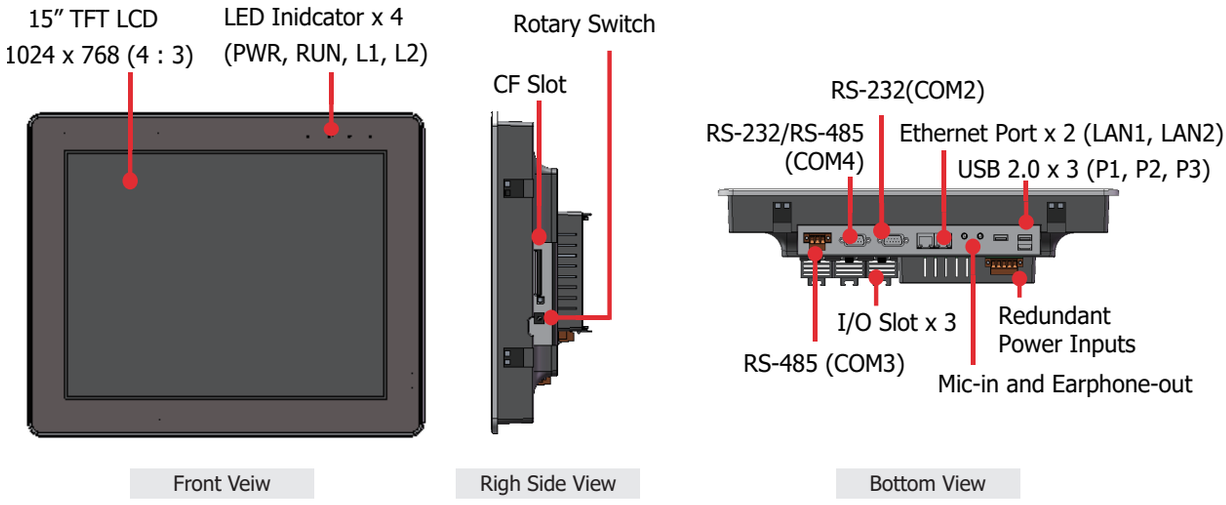


Front Veiw | Righ Side View | Bottom View

## Dimensions (Units: mm)

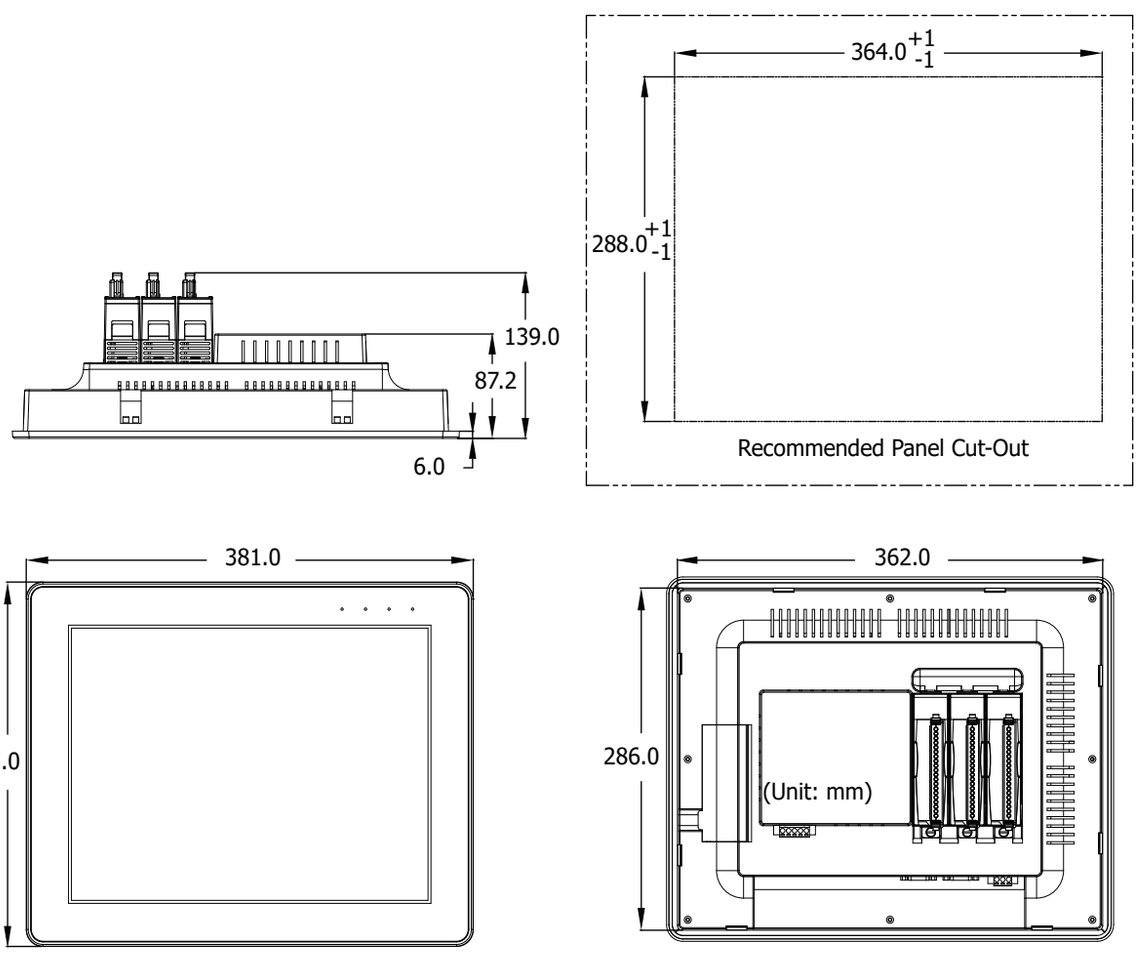


## Ordering Information

| | |
|---|---|
| **iPPC-6731-WES7 CR** | 15" Panel PC with Atom E3827 CPU, WES7, and 3 I/O Slots (RoHS) |
| **iPPC-6831-WES7 CR** | 15" Panel PC with Atom E3845 CPU, WES7, and 3 I/O Slots (RoHS) |

LRI Distribuída no Brasil pela LRI | vendas@lri.com.br | 51 2129-3000